Optical Specification

Model		Lens, IDS, IDS-8M118-C1228, 12 mm, 1/1.8"
Article Number		1007992
Resolution		2.2 µm
Mount		C-Mount
Sensor		⌀9(1/1.8")
Focal Length		12 mm
Adjustion Type		Manual
F NO.		F2.8~F16
Working Distance		100~infinity
Field Angle	1/3"(H x V x D)	22.62° x 17.06° x 28.07°
	1/2.5"(H x V x D)	24.08° x 18.18° x 29.86°
	1/2"(H x V x D)	29.86° x 22.62° x 36.87°
	2/3"(H x V x D)	33.40° x 25.36° x 41.13°
Distortion		<0.16% at WD300
Weight		0.06 kg
Back Focal Length		14.00 at WD100
		12.76 at infinity
Size		⌀29x35.5
Filter Thread		M27 x 0.5-6H
Working Temperature		-20°C~+60°C

Unit:mm

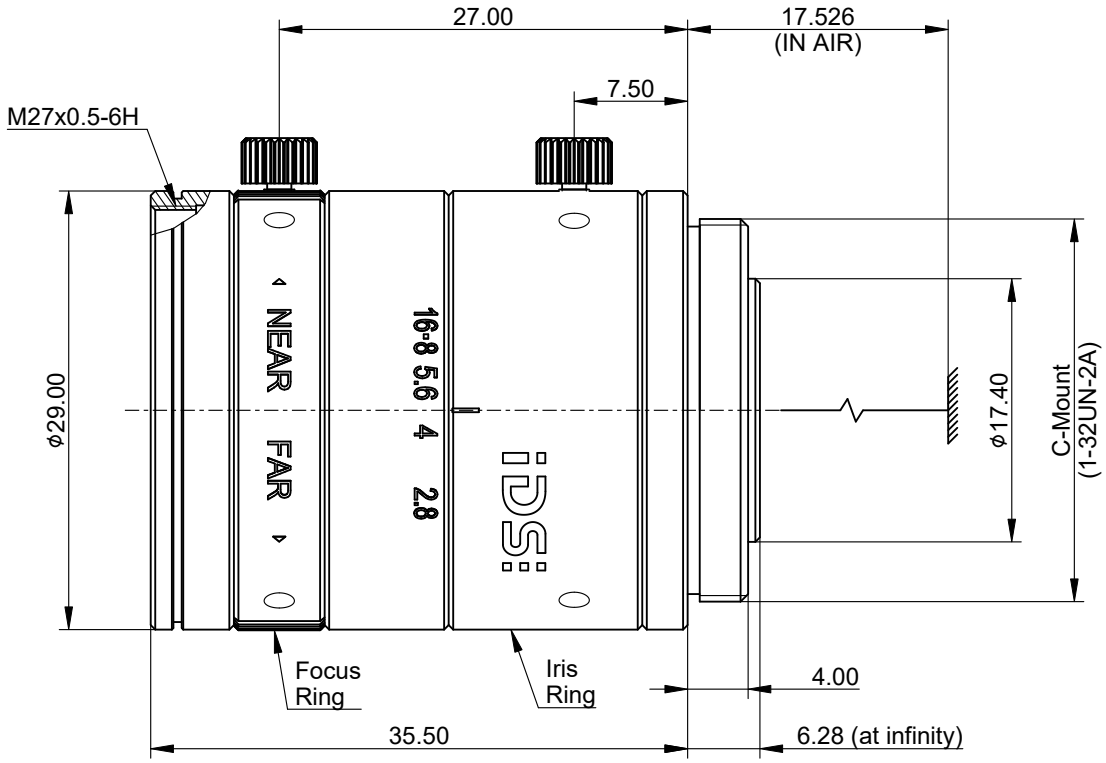

View Angle	Remark	Item	Signature	Date	IDS Imaging Development Systems GmbH
		Drawing			
Standard Different		Design			Lens, IDS, IDS-8M118-C1228, 12 mm, 1/1.8"
		Check			
		Approve			
IT14		Paper Size	A4		
		Revised Date	2023.07.22		Scale / Page 1/1 / Version A01

Copyright © 2023 by
IDS Imaging Development Systems GmbH
All Rights Reserved